POWER RELAY

2 POLE—5 A (MEDIUM LOAD CONTROL)

VB SERIES

RoHS compliant

■ FEATURES

- UL, CSA, VDE, SEV, SEMKO, FIMKO, IMQ recognized TV-3 rated
- Working class: C
- UL class B (130°C) insulation
- Type of service: continuous duty
- Heavy duty miniature slim type power relay
- High isolation in small package
  —Insulation distance: 8 mm
  —Dielectric strength: 5,000 VAC (between coil and contacts)
  —Surge strength: 10,000 V
- Standard and high sensitivity types available
- Flux free type and plastic sealed type available
- Lead Free since date code: 0438B9, 0434R - Please see page 8 for more information

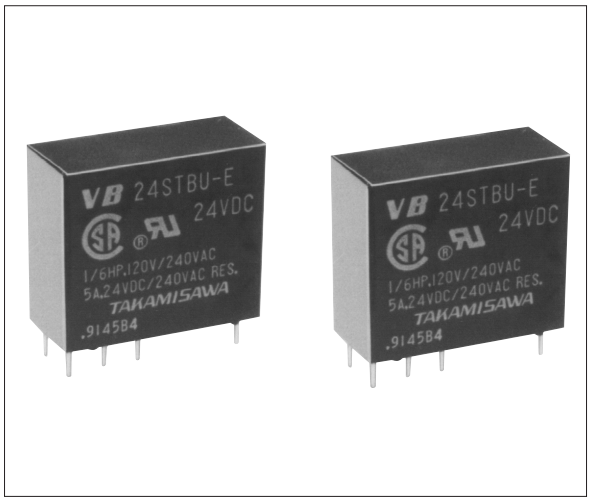

■ ORDERING INFORMATION

	VB	–	12	S	M	B	U	–	5
[Example]	(a)	(*)	(b)	(c)	(d)	(e)	(f)	(*)	(g)

(a)	Series Name	VB: VB Series
(b)	Nominal Voltage	Refer to the COIL DATA CHART
(c)	Coil Type	Nil : Standard type (700-750 mW) S : High sensitive type (530 mW)
(d)	Contact Arrangement	M : 2 form A (DPST-NO) T : 2 form C (DPDT)
(e)	Enclosure	B : Flux free type C : Plastic sealed type (with tape) K : Plastic sealed type
(f)	Standard	Nil : TV-rating U : General (non TV-rating)
(g)	Contact Material	N : Silver alloy Nil : Silver cadmium oxide (TV-3 rating) 5 : Silver cadmium oxide (non TV-rating) Nil : Gold overlay silver-nickel (non TV-rating) E : Silver-nickel (non TV-rating)

Actual marking omits the hyphen (–) of (*)

■ SAFETY STANDARD AND FILE NUMBERS

UL508, 873 (File No. E56140, E108658)
C 22.2 No. 1, No. 14 (File No. LR35579)
VDE0435, 0630, 0631, 0700, 0860 (File No. 11039-4940-1009)

Please note that UL/CSA ratings may differ from the standard ratings. Please request when the approval markings are required on the cover and/or when a relay recognized by VDE, SEV, SEMKO, FIMKO, IMQ is required.

	Type	Nominal voltage	Contact rating
TV-Rating	VB-( ) M	3 to 100 VDC	TV-3 120 VAC 1/6HP 120 VAC/240 VAC 5 A 24 VDC/240 VAC resistive 1.9A 250VAC indcutive (PF=0.4) Pilot duty C 150
Standard	VB-( ) ( ) U-( ) VB-( ) S ( ) U-( )	3 to 100 VDC	1/6HP 120 VAC/240 VAC 5 A 24 VDC/240 VAC resistive 1.9A 250VAC inductive (PF=0.4) Pilot duty C 150

■ SPECIFICATIONS

Item			TV-3 Rating		Standard Type		
			VB-( ) M	VB-( ) M-N	VB-( ) U-S	VB-( ) U-N	VB-( ) U VB-( )-E
Contact	Arrangement		2 form A (DPST-NO)		2 form A (DPST-NO) or 2 form C (DPDT)		
	Material		Silver-cadmium oxide	Silver-alloy	Silver-cadmium oxide	Silver-alloy	Gold overlay silver-nickel (non gold overlay only VB-E)
	Style		Single				
	Resistance (initial) (at 1 A 6 VDC)		Maximum 200 mΩ				Maximum 100 mΩ
	Rating (resistive)		5 A 240 VAC/24 VDC				
	Maximum Carrying Current		7 A				
	Maximum Switching Power		1,200 VA, 120 W				
	Maximum Switching Voltage		380 VAC, 150 VDC				
	Maximum Switching Current		5 A				
	Minimum Switching Load *1		100 mA 5 VDC (VB-M, 5, E) 10 mA 5 VDC (VB-)				
	Maximum Inrush Current		51 A 120 VAC (at lamp load)	—			
Coil	Nominal Power (at 20°C)		Standard type: 0.70 to 0.75 W, high sensitivity type: 0.53 W				
	Operate Power (at 20°C)		Standard type: 0.35 to 0.37 W, high sensitivity type: 0.26 W				
	Operating Temperature		Standard type: –40°C to +65°C, high sensitivity type: –40°C to +75°C (no frost)				
Time Value	Operate (at nominal voltage)		Maximum 15 ms				
	Release (at nominal voltage)		Maximum 10 ms				
Insulation	Resistance (at 500 VDC)		Minimum 1,000 MΩ				
	Dielectric Strength	between open contacts	1,000 VAC 1 minute (3000 VAC between adjacent contacts)				
		between coil and contacts*2	5,000 VAC 1 minute				
	Surge Strength*3		10,000 V at(1.2 × 50 μs)				
Life	Mechanical		2×10^7 operations minimum				
	Electrical		1×10^5 operations minimum at rated load				
			5×10^4 operations minimum at motor load (1/8HP 120 VAC)		3×10^4 operations minimum at motor load (1/8HP 120 VAC)		
			5×10^4 operations minimum at lamp load		—		
Other	Vibration Resistance	Misoperation	10 to 55 Hz (double amplitude of 1.5 mm)				
		Endurance	10 to 55 Hz (double amplitude of 1.5 mm)				
	Shock Resistance	Misoperation	100 m/s^2 (11 $^{\pm 1}$ ms)				
		Endurance	1,000 m/s^2 (6 $^{\pm 1}$ ms)				
	Weight		Approximately 17 g				

*1 Minimum switching loads mentioned above are reference values. Please perform the confirmation test with the actual load before production since reference values may vary according to switching frequencies, environmental conditions and expected reliability levels.

*2 IMQ 2

*3 IMQ 0

■ COIL DATA CHART

	TV-3 Rating 5A	Standard	Nominal Coil resistance	Must operate voltage	Must release (10%)	Nominal voltage	voltage	power
Standard Type	VB- 3M ( )	VB- 3 ( ) ( ) U-( )	3 V DC	12.5 Ω	2.1 VDC	0.3 VDC	0.72 W
	VB- 5M ( )	VB- 5( ) ( ) U-( )	5 V DC	36 Ω	3.5 VDC	0.5 VDC	0.70 W
	VB- 6M ( )	VB- 6( ) ( ) U-( )	6 V DC	50 Ω	4.2 VDC	0.6 VDC	0.72 W
	VB- 9M ( )	VB- 9( ) ( ) U-( )	9 V DC	115 Ω	6.3 VDC	0.9 VDC	0.70 W
	VB- 12M ( )	VB- 12( ) ( ) U-( )	12 V DC	200 Ω	8.4 VDC	1.2 VDC	0.72 W
	VB- 14M ( )	VB- 14( ) ( ) U-( )	14 V DC	280 Ω	9.8 VDC	1.4 VDC	0.70 W
	VB- 18M ( )	VB- 18( ) ( ) U-( )	18 V DC	460 Ω	12.6 VDC	1.8 VDC	0.70 W
	VB- 24M ( )	VB- 24( ) ( ) U-( )	24 V DC	820 Ω	16.8 VDC	2.4 VDC	0.70 W
	VB- 36M ( )	VB- 36( ) ( ) U-( )	36 V DC	1,850 Ω	25.2 VDC	3.6 VDC	0.70 W
	VB- 48M ( )	VB- 48( ) ( ) U-( )	48 V DC	3,300 Ω	33.6 VDC	4.8 VDC	0.70 W
	VB- 60M ( )	VB- 60( ) ( ) U-( )	60 V DC	5,100 Ω	42.0 VDC	6.0 VDC	0.70 W
	VB-100M ( )	VB-100( ) ( ) U-( )	100 V DC	13,400 Ω	70.0 VDC	10.0 VDC	0.75 W
High Sensitivity Type		VB- 3S( ) ( ) U-( )	3 V DC	17 Ω	2.1 VDC	0.3 VDC	0.53 W
		VB- 5S( ) ( ) U-( )	5 V DC	47 Ω	3.5 VDC	0.5 VDC	0.53 W
		VB- 6S( ) ( ) U-( )	6 V DC	68 Ω	4.2 VDC	0.6 VDC	0.53 W
		VB- 9S( ) ( ) U-( )	9 V DC	155 Ω	6.3 VDC	0.9 VDC	0.53 W
		VB-12S( ) ( ) U-( )	12 V DC	270 Ω	8.4 VDC	1.2 VDC	0.53 W
		VB-14S( ) ( ) U-( )	14 V DC	370 Ω	9.8 VDC	1.4 VDC	0.53 W
		VB-18S( ) ( ) U-( )	18 V DC	610 Ω	12.6 VDC	1.8 VDC	0.53 W
		VB-24S( ) ( ) U-( )	24 V DC	1,100 Ω	16.8 VDC	2.4 VDC	0.53 W
		VB-36S( ) ( ) U-( )	36 V DC	2,450 Ω	25.2 VDC	3.6 VDC	0.53 W
		VB-48S( ) ( ) U-( )	48 V DC	4,400 Ω	33.6 VDC	4.8 VDC	0.53 W
		VB-60S( ) ( ) U-( )	60 V DC	6,800 Ω	42.0 VDC	6.0 VDC	0.53 W
		VB-100S( ) ( ) U-( )	100 V DC	18,860 Ω	70.0 VDC	10.0 VDC	0.53 W

Note: All values in the table are measured at 20 °C.

■ CHARACTERISTIC DATA

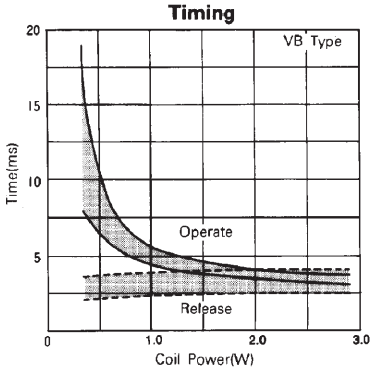

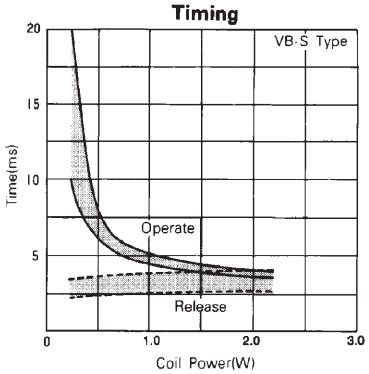

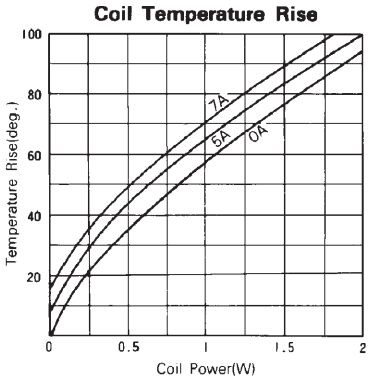

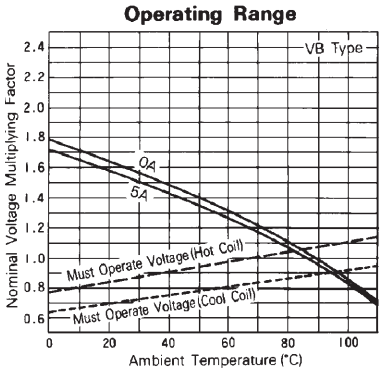

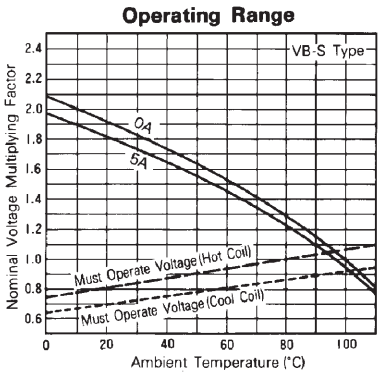

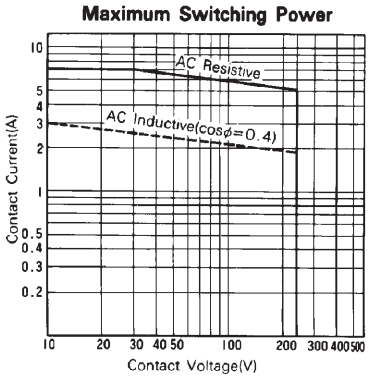

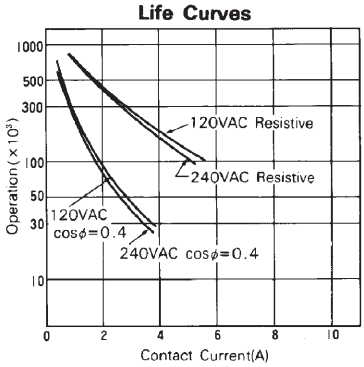

■ REFERENCE DATA

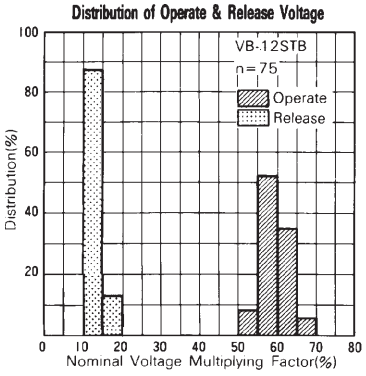

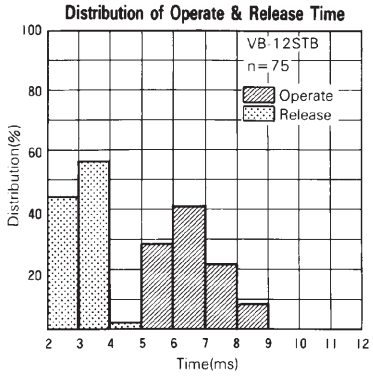

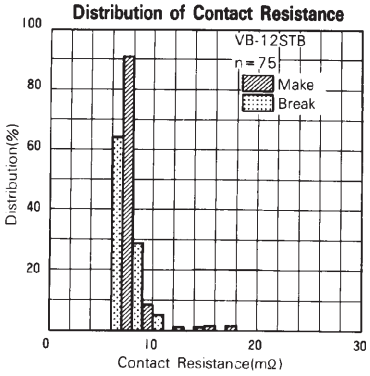

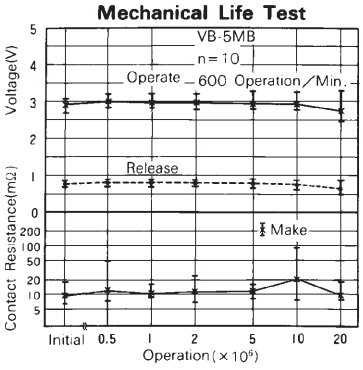

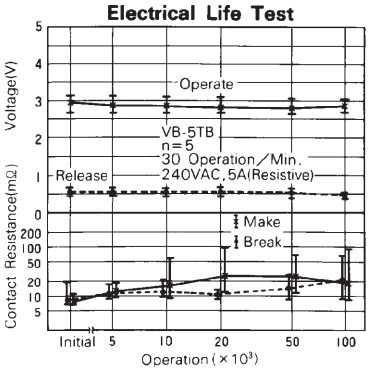

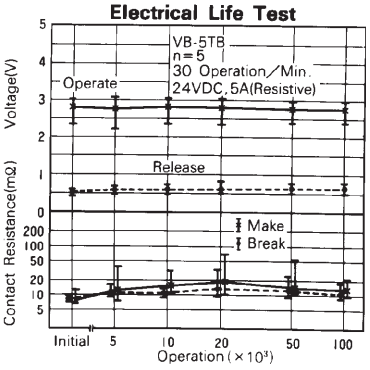

■ DIMENSIONS

- **Dimensions**
- **Schematics** (BOTTOM VIEW)
- **PC board mounting hole layout** (BOTTOM VIEW)

VB-M type

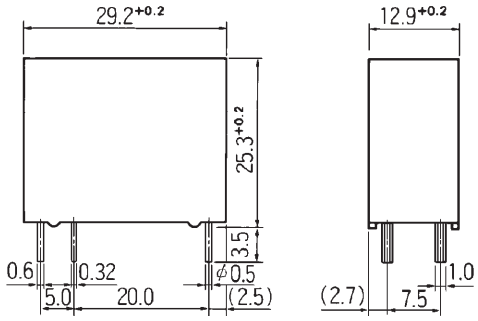

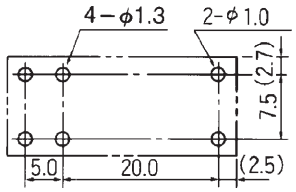

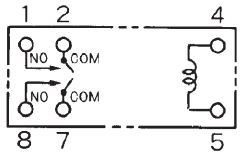

VB type

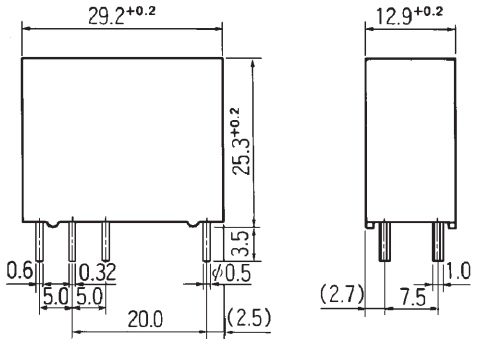

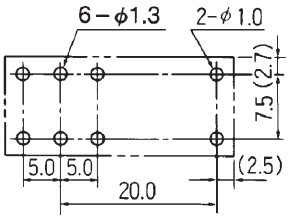

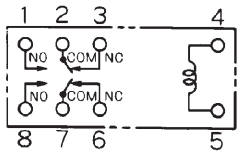

VB-MK type (Plastic sealed type)

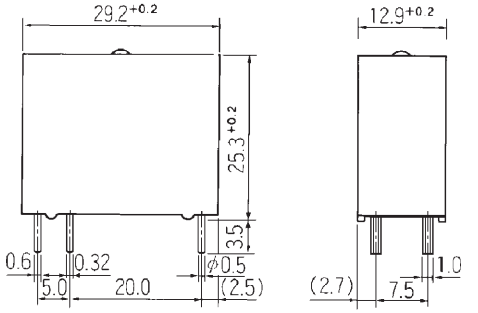

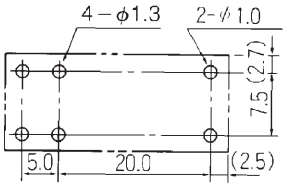

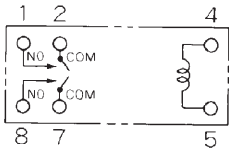

VB-K type (Plastic sealed type)

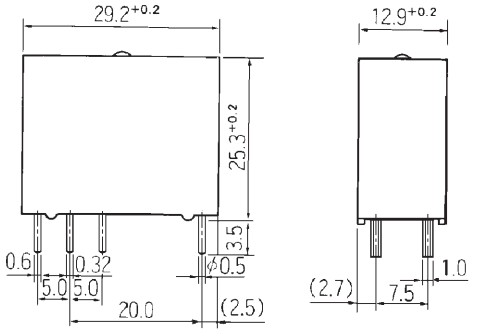

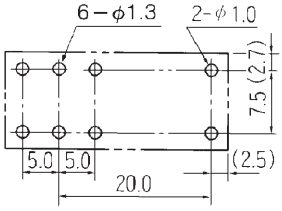

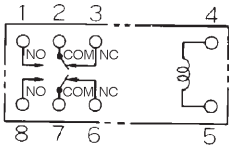

Unit: mm

VB-MC type (Plastic sealed type with tape)

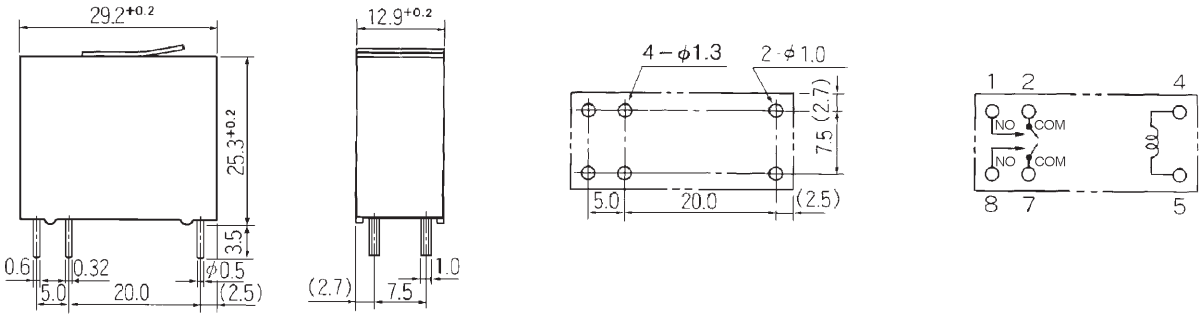

VB-C type (Plastic sealed type with tape)

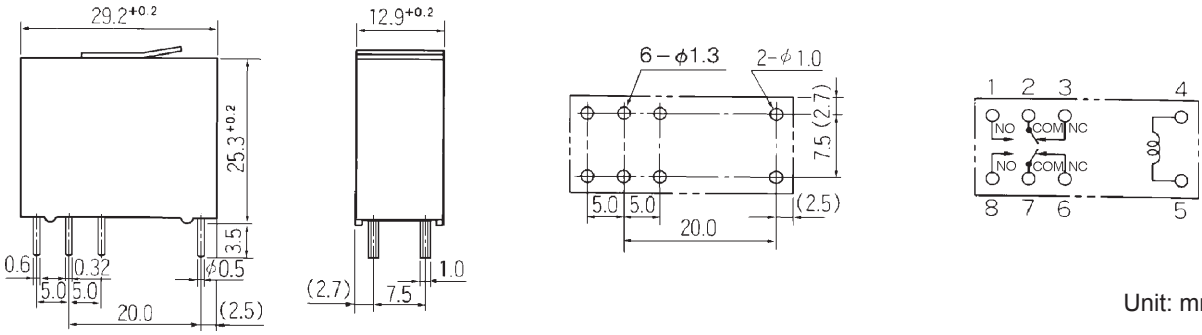

Unit: mm

RoHS Compliance and Lead Free Relay Information

1. General Information

- Relays produced after the specific date code that is indicated on each data sheet are lead-free now. Most of our signal and power relays are lead-free. Please refer to Lead-Free Status Info. (http://www.fujitsu.com/us/downloads/MICRO/fcai/relays/lead-free-letter.pdf)
- Lead free solder paste currently used in relays is Sn-3.0Ag-0.5Cu.
- All signal and most power relays also comply with RoHS. Please refer to individual data sheets. Relays that are RoHS compliant do not contain the 5 hazardous materials that are restricted by RoHS directive (lead, mercury, chromium IV, PBB, PBDE).
- It has been verified that using lead-free relays in leaded assembly process will not cause any problems (compatible).
- "LF" is marked on each outer and inner carton. (No marking on individual relays).
- To avoid leaded relays (for lead-free sample, etc.) please consult with area sales office.
- We will ship leaded relays as long as the leaded relay inventory exists.

Note: Cadmium was exempted from RoHS on October 21, 2005. (Amendment to Directive 2002/95/EC)

2. Recommended Lead Free Solder Profile

- Recommended solder paste Sn-3.0Ag-0.5Cu.

Reflow Solder condtion

Flow Solder condtion:

Pre-heating:	maximum 120˚C
Soldering:	dip within 5 sec. at 260˚C soler bath

Solder by Soldering Iron:

Soldering Iron Temperature:	maximum 360˚C
Duration:	maximum 3 sec.

We highly recommend that you confirm your actual solder conditions

3. Moisture Sensitivity

- Moisture Sensitivity Level standard is not applicable to electromechanical realys.

4. Tin Whisker

- Dipped SnAgCu solder is known as low risk tin whisker. No considerable length whisker was found by our in house test.

Fujitsu Components International Headquarter Offices

Japan
Fujitsu Component Limited
Gotanda-Chuo Building
3-5, Higashigotanda 2-chome, Shinagawa-ku
Tokyo 141, Japan
Tel: (81-3) 5449-7010
Fax: (81-3) 5449-2626
Email: promothq@ft.ed.fujitsu.com
Web: www.fcl.fujitsu.com

North and South America
Fujitsu Components America, Inc.
250 E. Caribbean Drive
Sunnyvale, CA 94089 U.S.A.
Tel: (1-408) 745-4900
Fax: (1-408) 745-4970
Email: marcom@fcai.fujitsu.com
Web: http://www.fujitsu.com/us/services/edevices/components/

Europe
Fujitsu Components Europe B.V.
Diamantlaan 25
2132 WV Hoofddorp
Netherlands
Tel: (31-23) 5560910
Fax: (31-23) 5560950
Email: info@fceu.fujitsu.com
Web: http://www.fujitsu.com/emea/services/components/

Asia Pacific
Fujitsu Components Asia Ltd.
102E Pasir Panjang Road
#04-01 Citilink Warehouse Complex
Singapore 118529
Tel: (65) 6375-8560
Fax: (65) 6273-3021
Email: fcal@fcal.fujitsu.com
Web: http://www.fujitsu.com/sg/services/micro/components/